freegamemanuals.com

Nintendo

Nintendo of America Inc.
P.O. Box 957, Redmond, WA 98073-0957 U.S.A.

PRINTED IN JAPAN

NES-A-ST

NES SATELLITE™

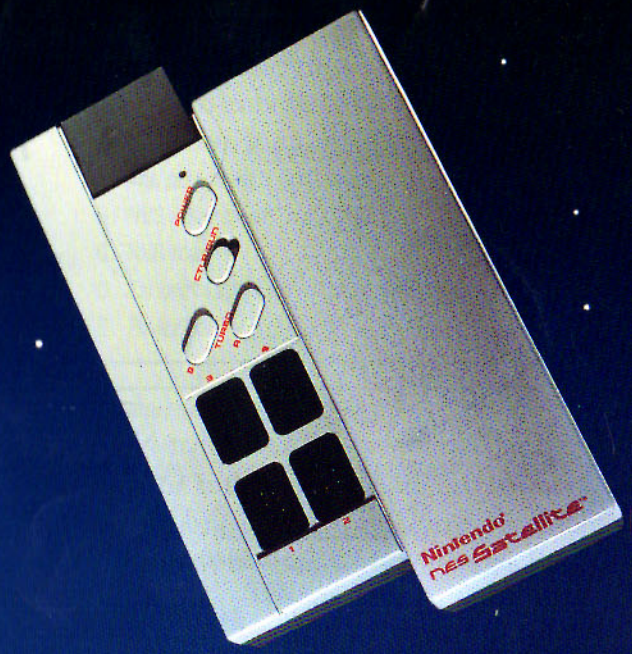

INSTRUCTION BOOKLET

TABLE OF CONTENTS

Section 1 – Instruction Manual

	Page
Consumer Assistance Hotline	2
NES Satellite Receiver	3
NES Satellite Transmitter	3
Using Accessories with the NES Satellite	4
Battery Life and Precautions	5
Additional Hints on NES Satellite Operation	5
Proper Care of the NES Satellite	6
If the NES Satellite Does not Work	6

Section 2 – Warranties and Service

	Page
90 Day Limited Warranty	7
Repairs After Expiration Warranty	8
Limitations of Warranties	8
NES Consumer Parts List and Order Form	9

This official seal is your assurance that Nintendo has reviewed this product and that it has met our standards for excellence in workmanship, reliability and entertainment value. Always look for this quality seal when buying games and accessories to ensure complete compatibility with your Nintendo Entertainment System.

Official Nintendo Seal of Quality ™

SECTION 1

NES SATELLITE™ INSTRUCTION MANUAL

Congratulations on purchasing the new NES Satellite™ Remote Control Module, the first system for the Nintendo Entertainment System® that will allow you wireless infrared control as well as simultaneous four-player action using any of your NES accessories.

To use the NES Satellite, you need:

1. Nintendo Entertainment System® Control Deck™
2. Any Nintendo-compatible Game Pak
3. Any of the following accessories*:
   A. The original NES Controllers
   B. NES Advantage®
   C. NES Max®
   D. Zapper® Light Gun
   E. Power Pad®

NEED HELP?

Nintendo Consumer Assistance Telephone Hotline:

1-800-255-3700
Monday through Saturday
6:00 am to 6:00 pm, Pacific Time

*Other Nintendo-licensed accessories may be compatible with the NES Satellite. Please contact Consumer Assistance at the number listed above if you have questions regarding accessory usage.

™ and ® are trademarks of Nintendo of America Inc.
© 1989 Nintendo

NES SATELLITE – RECEIVER

The Receiver Module is plugged into the Controller cable sockets on the front of the NES Control Deck. Make sure that the power is **OFF** on the Control Deck whenever inserting or removing the Receiver. Grasp the Receiver by the ribbed area on each side and insert straight into the sockets in the Control Deck. Do not twist or force the Receiver when inserting or removing.

The small LED on the front of the Receiver is a signal indicator light. During game play it will flash when information is being received. It will also flash every few seconds even if no action is taking place because the infrared module is constantly updating game play conditions. (See Illustration 1)

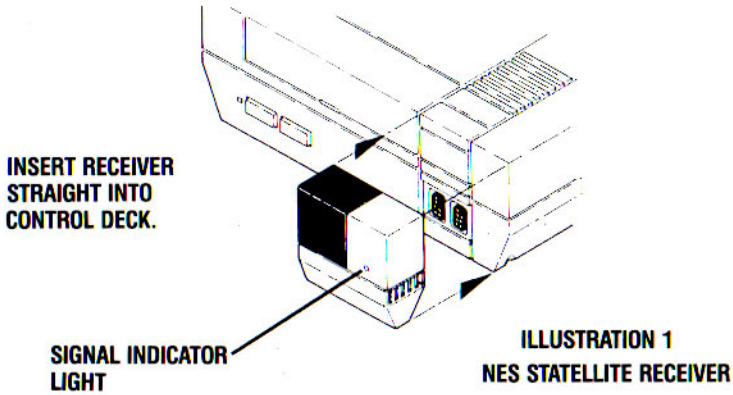

ILLUSTRATION 1
NES STATELLITE RECEIVER

NES SATELLITE – TRANSMITTER

The Transmitter requires six (6) "C"-size batteries to operate. (Do not use rechargeable batteries.) Remove the battery door on the bottom of the transmitter and install batteries as shown on the inside of the battery compartment. Replace the battery door.

The Transmitter should be placed on a flat stable surface so the black lens on the front is in line with the black lens of the Receiver. The Satellite Transmitter will work even if it is not pointed directly at the Receiver because the infrared signal is fairly wide. Make sure nothing blocks the signal between the Transmitter and the Receiver. Please note that the working range is between 1 and 15 feet.

Power Switch — To turn the NES Satellite on, depress the Power Switch. The red LED will light to show that the power is on. Pressing the switch again will turn the power off. If the Transmitter is left on for seven (7) minutes without being used, it will automatically turn itself off to save battery life. Press the power switch again to turn it back on.

Mode Switch — This switch must be left in the "CTLR" (Controller) position unless you are using a game which requires the Zapper Light Gun. For those games which use the Zapper, or a Zapper *and* a regular controller, you must have this switch in the "GUN" position.

Turbo Buttons — These buttons turn on "A" or "B" Turbo for all sockets at the same time. If you are using an accessory which has built-in Turbo features, it is best to use only one Turbo feature. For example, if you are using the NES Advantage, you should use either the Turbo on the Advantage or the Turbo on the Satellite, but not both at the same time.

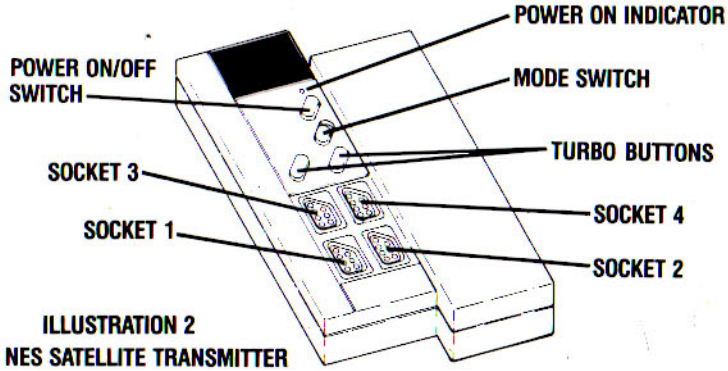

ILLUSTRATION 2
NES SATELLITE TRANSMITTER

USING ACCESSORIES WITH THE NES SATELLITE

NOTE: The power on the Transmitter should be off before plugging or unplugging any accessories.

NES Advantage, NES Max and the **NES original controllers** — All of these accessories can be used in any of the four controller sockets. However, the NES Satellite operates differently in the three or four-player mode than in the one or two-player mode. Because of this, you should only plug in the necessary controller(s) for the game you are playing. For example, if you are playing Super Mario Bros.® with one or two players, you should not have any other controllers plugged into #3 or #4 socket. Not all accessories are totally compatible. If connecting two or more controllers (other than standard type), please call Nintendo Consumer Assistance.

Zapper Light Gun — The Zapper must be plugged into socket #2 to operate correctly. The mode switch must be in the GUN position for any games which use the Zapper Light Gun or the Zapper and any other controllers. Other controllers can be used in socket #1 if the game calls for it.

Power Pad — The Power Pad must be plugged into socket #2. The mode switch should be in the "CTLR" position and the #3 and #4 sockets should be empty. Other controllers can be used in socket #1 if the game calls for it.

BATTERY LIFE AND PRECAUTIONS

NOTE: Do not use Ni-Cad (rechargeable-type) batteries.

Various factors can affect the life of the batteries:

- Four-player games use more power than one or two-player games.
- Using Turbo features takes more power than no Turbo.
- Continual use takes more power than occasional use.
- High-quality alkaline batteries will last longer than regular batteries.
- Extremes of cold or heat will reduce battery life.
- Some accessories may use more power than others.

Approximately 180 hours of battery life can be expected under normal usage. Normal usage would be considered four hours of play a day using original controllers, a one or two-player game pak and a distance of about 8 feet between the Transmitter and the Receiver.

The batteries should be removed from the Transmitter if the Satellite won't be used for a month or more. Do not expose the batteries to high heat or moisture.

ADDITIONAL HINTS ON NES SATELLITE OPERATION

- Other remote control devices, such as those used for TV's and VCR's, may interfere with the NES Satellite if they are used during game play. Two satellites used close together may also interfere with each other.
- Bright sunlight, neon light or bright fluorescent light near the Satellite may interfere with proper operation. The light source should be reduced or blocked if this problem occurs.
- Care should be taken to avoid scratching or soiling the black infrared lenses as this will interfere with the infrared beam.
- Be certain to remove or insert the Receiver carefully into the Control Deck to avoid damaging either the Receiver plugs or the Control Deck connector pins.
- The signal from the transmitter is approximately 60° from side to side and 30° up and down, so the Satellite will operate even if the Transmitter is not pointed directly at the Receiver.

PROPER CARE OF THE NES SATELLITE

- Do not expose to high temperature, humidity or severe shocks.
- Keep in a clean dry place. Water or any foreign materials in connector sockets, on infrared lens or on batteries will adversely affect operation.
- Use a soft, damp cloth to remove any stains. Do not use abrasives, alcohol or solvents to clean.
- When disconnecting the Receiver from the Control Deck, be sure to grasp it on the ribbed area on either side while pulling. Never force or twist the receiver.

TROUBLESHOOTING

Problem	Causes
Transmitter LED doesn't light up when power switch is pressed.	Batteries are installed incorrectly; check alignment. Batteries are dead and need to be replaced.
Transmitter LED is lit when power switch is pressed but game does not respond properly to operation of controllers.	Transmitter is not pointed close enough to Receiver or is too far above or below Receiver. Transmitter is less than 1 foot or more than 15 feet from Receiver. Controllers are plugged into wrong sockets. Mode switch is in wrong position. Transmitter needs to be reset by turning the power off, then on again. Battery power is low. An obstruction is blocking the signal path between the Transmitter and the Receiver. A bright light source is interfering with the Transmitter signal.

NOTE: **Because each game is different, some games may not work as well as others when using the NES Satellite. Also, the Satellite may affect how slow motion and turbo features work on some accessories.**

SECTION 2 – WARRANTY AND SERVICE

90-DAY LIMITED WARRANTY

Nintendo of America Inc. ("Nintendo") warrants to the original consumer purchaser that the NES SATELLITE shall be free from defects in material and workmanship for a period of 90 days from the date of purchase. If a defect covered by this warranty occurs during this 90-day period, Nintendo will repair or replace the defective NES SATELLITE or component part, at its option, free of charge.

To receive this warranty service:

1) Notify the Nintendo Consumer Service Department of the problem requiring warranty service by calling: 1-800-255-3700. Our Consumer Service Department is in operation from 6:00 A.M. to 6:00 P.M. Pacific Time, Monday through Saturday. **Please do not** send your defective components to Nintendo before calling the Nintendo Consumer Service Department.
2) If the Nintendo service representative is unable to solve the problem by phone, you will be provided with a Return Authorization number. You must record this number on the outside packaging of your defective NES SATELLITE, and return your NES SATELLITE **FREIGHT PREPAID AND INSURED FOR LOSS OR DAMAGE** within the 90-day warranty period, to:

Nintendo of America Inc.
NES Consumer Service Department
4820 150th Avenue N.E.
Redmond, WA 98052

This warranty shall not apply if the NES SATELLITE has been damaged by negligence, accident, unreasonable use, commercial use, modification, tampering, or other causes unrelated to defective materials or workmanship, or if the serial number has been removed or defaced.

REPAIRS AFTER EXPIRATION OF WARRANTY

If the NES SATELLITE develops a problem requiring service after the 90-day warranty period, you may contact the Nintendo Consumer Service Department at 1-800-255-3700 (6:00 A.M. to 6:00 P.M., Pacific Time, Monday through Saturday). If the Nintendo service representative is unable to solve the problem by phone, you will be advised of the approximate cost for Nintendo to repair or replace the NES SATELLITE and a Return Authorization number will be given to you.

You must then record this number on the outside packaging of the defective NES SATELLITE and return the defective merchandise, **FREIGHT PREPAID, INSURED FOR LOSS OR DAMAGE,** to Nintendo, and enclose a money order payable to Nintendo of America Inc., for the cost quoted you. (Repairs may also be charged on a VISA or MASTERCARD credit card.)

If after personal inspection, the Nintendo service representative determines the NES SATELLITE cannot be repaired, it will be returned and your payment refunded.

WARRANTIES LIMITATIONS

ANY APPLICABLE IMPLIED WARRANTIES, INCLUDING WARRANTIES OF MERCHANTABILITY AND FITNESS FOR A PARTICULAR PURPOSE, ARE HEREBY LIMITED TO NINETY DAYS FROM THE DATE OF PURCHASE AND ARE SUBJECT TO THE CONDITIONS SET FORTH HEREIN. IN NO EVENT SHALL NINTENDO BE LIABLE FOR CONSEQUENTIAL OR INCIDENTAL DAMAGES RESULTING FROM THE BREACH OF ANY EXPRESS OR IMPLIED WARRANTIES.

The provisions of this warranty are valid in the United States only. Some states do not allow limitations on how long an implied warranty lasts or exclusion of consequential or incidental damages, so the above limitation or exclusion may not apply to you. This warranty gives you specific legal rights and you may also have other rights which vary from state to state.

NES SATELLITE CONSUMER PARTS LIST & ORDER FORM

Nintendo Part No.	Part Name	Price	Qty	Amount of Purchase
18485	Battery Cover	$2.00		
			SUBTOTAL	
			WASHINGTON STATE RESIDENTS **ONLY** ADD 8.1% SALES TAX	
			POSTAGE & HANDLING	$0.50
			For expedited shipping service (2 day Air Freight) please add an additional $2.50	
			TOTAL AMOUNT DUE	

99003

To Order by Phone (Requires VISA or MASTERCARD) Call: 1-800-255-3700, 6:00 A.M. to 6:00 P.M., Pacific time (Monday to Saturday). Please have your VISA or MASTERCARD card number and expiration date ready.

To Order by Mail, Please Complete the Following:

1. Name _____ Phone ( ) _____

   Street Address _____

   City _____ State _____ Zip _____

2. Enclose Money Order or Credit Card Authorization for Total Amount Due.

   If paying by VISA or MASTERCARD:
   Please charge total amount due of $ _____ to my: ☐ VISA ☐ MASTERCARD

   CARD # _____ Expiration Date _____

   Name on Card (Print) _____

   Signed _____

3. Mail to: **Nintendo of America Inc., P.O. Box 97032, Redmond, WA 98073-9732**

Allow 6-8 weeks for delivery. We cannot accept cash, personal checks, or C.O.D. orders. Prices are applicable within the United States only and are subject to change without notice.